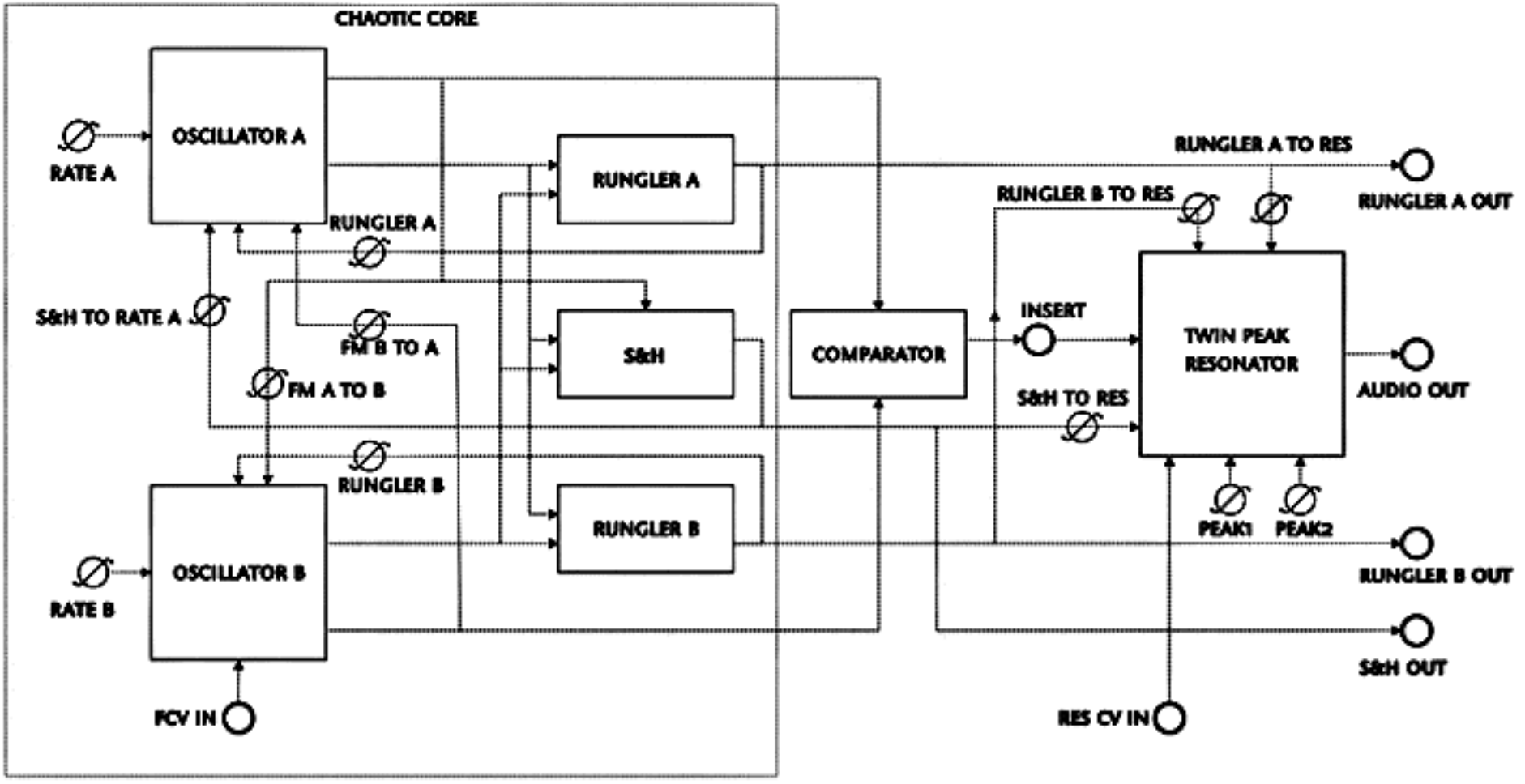
CHAOTIC CORE
OSCILLATOR A
RATE A
RUNGLER A
RUNGLER A
S&H TO RATE A
FM B TO A
FM A TO B
S&H
COMPARATOR
RUNGLER A TO RES
RUNGLER A OUT
RUNGLER B TO RES
INSERT
TWIN PEAK RESONATOR
AUDIO OUT
S&H TO RES
RUNGLER B
RUNGLER B
PEAK1
PEAK2
OSCILLATOR B
RATE B
RUNGLER B OUT
S&H OUT
FCV IN
RES CV IN